GREE
Change for life

AIR CONDITIONER INDOOR UNIT

Owner's Manual

Original Instructions

Commercial Air Conditioners

GMV DC Air Handler

Models:

GMV-ND24A/A-T(U)

GMV-ND30A/A-T(U)

GMV-ND36A/A-T(U)

GMV-ND42A/A-T(U)

GMV-ND48A/A-T(U)

GMV-ND54A/A-T(U)

Thank you for choosing commercial air conditioners.Please read this Owner' s Manual carefully before operation and retain it for future reference.
If you have lost the Owner's Manual, please contact the local agent or visit www.gree.com or send an email to global@gree.com.cn for the electronic version.

Preface

For correct installation and operation, please read all instructions carefully. Before reading the instructions, please be aware of the following items:

(1) For the safe operation of this unit, please read and follow the instructions carefully.

(2) During operation, total capacity of indoor units should not exceed the total capacity of outdoor units. Otherwise, poor effect of cooling or heating may result.

(3) Direct operators or maintainers should well keep this manual.

(4) If this unit fails to operate normally, please contact our service center as soon as possible and provide the following information:

● Content on the nameplate(model number, cooling capacity, production code, ex-factory date).

● Malfunction details(before and after the malfunction occurs).

(5) Each unit has been strictly tested and proved to be qualified before ex-factory. In order to prevent units from being damaged or operating normally because of improper disassembly, please do not disassemble the unit by yourself. If you need to disassemble and check units, please contact our service center. We will send specialists to guide the disassembly.

(6) All graphics in this manual is only for your reference. For sales or production reasons, these graphics are subject to change by manufacturer without prior notice.

User Notice

● This appliance is not intended for use by persons (including children) with reduced physical, sensory or mental capabilities, or lack of experience and knowledge, unless they have been given supervision or instruction concerning use of the appliance by a person responsible for their safety.Children should be supervised to ensure that they do not play with the appliance.

Correct Disposal of this product	
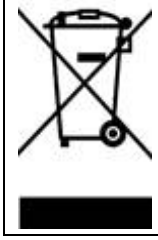	This marking indicates that this product should not be disposed with other household wastes. To prevent possible harm to the environment or human health from uncontrolled waste disposal, recycle it responsibly to promote the sustainable reuse of material resources. To return your used device, please use the return and collection systems or contact the retailer where the product was purchased. They can take this product for environmental safe recycling.

Contents

1 Safety Precautions

⚠ WARNING
(1) Follow this instruction to complete the installation work. Please carefully read this manual before unit startup and service.
(2) Wire size of power cord should be large enough.The damaged power cord and connection wire should be replaced by exclusive cable.
(3) After connecting the power cord, please fix the electric box cover properly in order to avoid accident.
(4) Never fail to comply with the nitrigen charge requirements.Charge nitrogen when welding pipes.
(5) Never short-circiut or cancel the pressure switch to prevent unit damage.
(6) Please firstly connect the wired controller before energization, otherwise wired controller can not be used.
(7) Before using the unit, please check if the piping and wiring are correct to avoid water leakage, refrigerant leakage, electric shock, or fire etc..
(8) Do not insert fingers or objects into air outlet/inlet grille.
(9) Open the door and window and keep good ventilation in the room to avoid oxygen deficit when the gas/oil supplied heating equipment is used.
(10) Never start up or shut off the air conditioner by means of directly plug or unplug the power cord.
(11) Turn off the unit after it runs at least five minutes; otherwise it will influence oil return of the compressor.
(12) Do not allow children operate this unit.
(13) Do not operate this unit with wet hands.
(14) Turn off the unit or cut off the power supply before cleaning the unit, otherwise electric shock or injury may happen.
(15) Never spray or flush water towards unit, otherwise malfunction or electric shock may happen.
(16) Do not expose the unit to the moist or corrosive circumstances.
(17) Under cooling mode, please don't set the room temperature too low and keep the temperature difference between indoor and outdoor unit within 5℃ (41℉).
(18) User is not allowed to repair the unit. Fault service may cause electric shock or fire accidents. Please contact Gree appointed service center for help.
(19) Before installation, please check if the power supply is in accordance with the requirements specified on the nameplate. And also take care of the power safety.
(20) Installation should be conducted by dealer or qualified personnel. Please do not attempt to install the unit by yourself. Improper handling may result in water leakage, electric shock or fire disaster etc..

(21) Be sure to use the exclusive accessory and part to prevent the water leakage, electric shock and fire accidents.
(22) Make sure the unit can be earthed properly and soundly after plugging into the socket so as to avoid electric shock. Please do not connect the ground wire to gas pipe, water pipe, lightning rod or telephone line.
(23) Electrify the unit 8 hours before operation. Please switch on for 8 hours before operation. Do not cut off the power when 24 hours short-time halting (to protect the compressor).
(24) If refrigerant leakage happens during installation, please ventilate immediately. Poisonous gas will emerge if the refrigerant gas meets fire.
(25) Volatile liquid, such as diluent or gas will damage the unit appearance.Only use soft cloth with a little neutral detergent to clean the outer casing of unit.
(26) If anything abnormal happens (such as burning smell), please power off the unit and cut off the main power supply, and then immerdiately contact Gree appointed service center.If abnormality keeps going, the unit might be damaged and lead to electric shock or fire.

Any personal injury or property loss caused by improper installation, improper debug, unnecessary repair or not following the instructions of this manual should not be the responsibility of Gree Electric Appliances, Inc. of Zhuhai.

2 Product Introduction

2.1 Names of Key Components

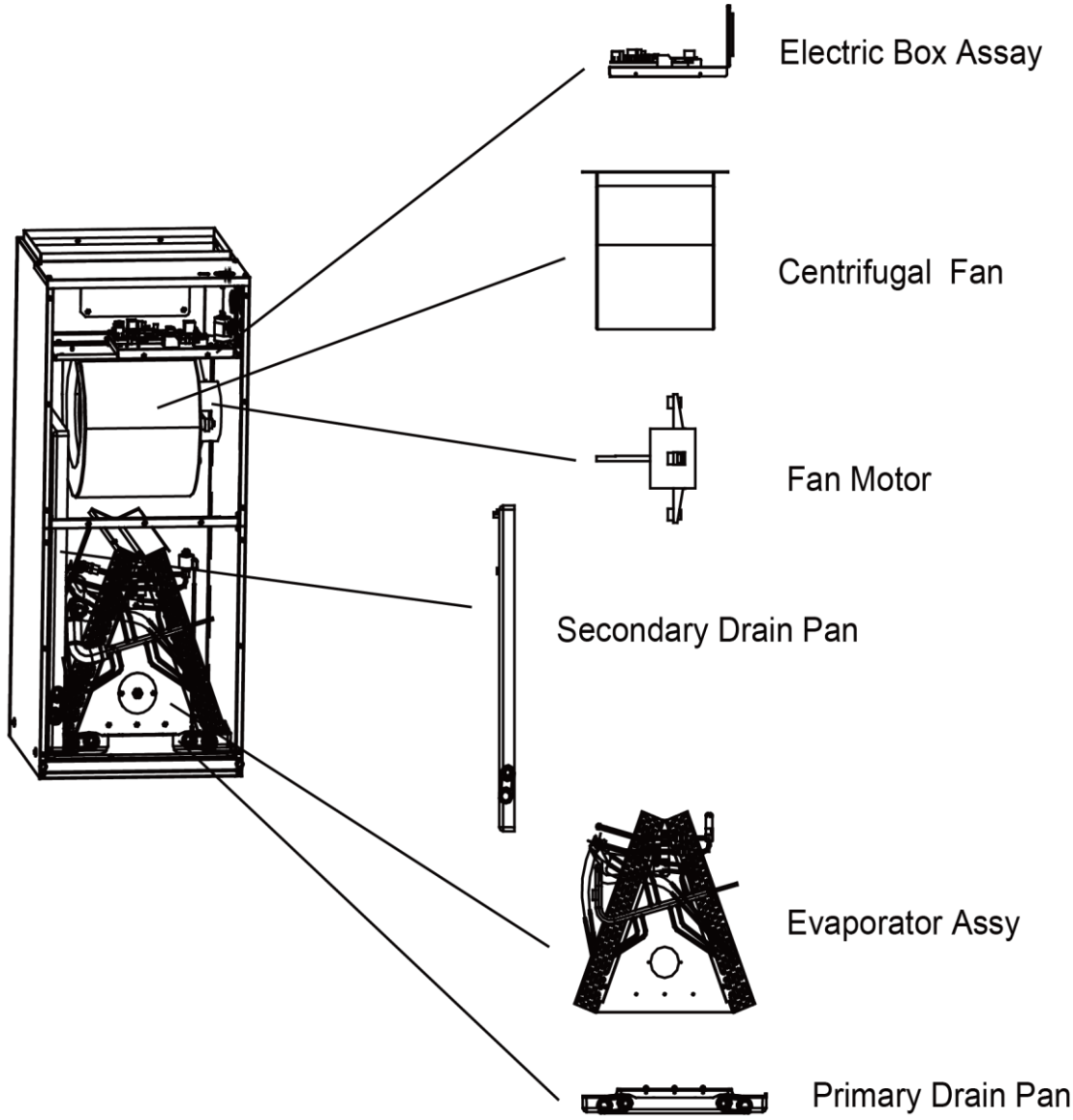

Fig 2.1

2.2 Rated Working Condition

	Indoor Side Condition		Outdoor Side Condition	
	Dry Bulb Temp℃(℉)	Wet Bulb Temp℃(℉)	Dry Bulb Temp℃(℉)	Wet Bulb Temp℃(℉)
Rated Cooling	27(80.6)	19(66.2)	35(95)	24(75.2)
Rated Heating	20(68.0)	15(59.0)	7(44.6)	6(42.8)

Indoor Unit Working Temperature Range: 16°C(60.8 °F)~32°C(89.6 °F)

3 Preparative for Installation

3.1 Pre-Installation Instruction

3.1.1 Checking Product Received

After receiving the product, please check if there is any damage caused by transportation.Shipping damage is the responsibility of the carrier. Verify the model number, specifications and accessories are correct prior to installation. The distributor or manufacturer will not accept claims from dealers for transportation damage or installation of incorrectly shipped units.

3.1.2 Before Installation

Carefully read all instructions for the installation prior to installing product. Make sure each step or procedure is understood and any special considerations are taken into account before starting installation. Assemble all tools, hardware and supplies needed to complete the installation. Some items may need to be purchased locally. Make sure everything needed to install the product is on hand before starting.

3.1.3 Codes & Regulations

This product is designed and manufactured to comply with national codes. It is installer's responsibilities to install the product in accordance with such codes and/or any prevailing local codes/regulations. The manufacturer assumes no responsibilities for equipment installed in violation of any codes or regulations.

3.1.4 Replacement Parts

When reporting shortages or damages, or ordering repair parts, give the complete product model and serial numbers as stamped on the product. Replacement parts for this product are available through your contractor or local distributor.

3.2 Important Safety Instructions

Recognize Safety Symbols, Words, and Labels

The following symbols and labels are used throughout this manual to indicate immediate or potential hazards. It is the owner's responsibility to read and comply with all safety information and instructions accompanying these symbols. Failure to heed safety information increases the risk of serious personal injury or death, property damage and/or product damage.

DANGER: Immediate hazards which will result in property damage, product damage, severe personal injury or death.

WARNING: Hazards or unsafe pratices could result in property damage, product damage, severe personal injury or death.

CAUTION: Hazards or unsafe practices which may result in property damage, product damage, severe personal injury or death.

WARNING: Before serving or installing this equipment. The electrical power to this unit must be in the “off” position. Caution, more than one disconnect may exist. Failure to observe this warning may result in an electrical shock that can cause personal injury or death.

WARNING: The United States environmental protection agency (‘epa”) has issued various regulations regarding the introduction and disposal of refrigerants introduced into this unit. Failure to follow these regulations may harm the enviroment and can lead to the imposition of substantial fines. These regulations may vary due to the passage of laws. A certified technician must perform the installation and service of this product. Should questions arise, contact your local epa office.

WARNING: Due to high system pressure and electrical shock in potential, installation and service work can be dangerous. Only trained and qualified personnels are permitted to install or service this equipment. Observe all warnings contained in this manual and labels/tags attached to the equipment.

WARNING: This product is factory shipped for use with a 208-230/1/60 electrical power supply. This air handler must not be reconfigured to operate with any other power supply.

WARNING: The unit must have an uninterrupted, unbroken electric grounding to minimize the possibility of personal injury if an electric fault occurs. The electric grounding circuit may consist of an appropriate sized power cord which connected with the grounding piece located in the unit control box and also connecting to the building electric service panel. Other methods of grounding are permitted if performed in accordance with the “national electric code” (nec)/ “american national standards institute” (ansi)/ “national fire protection association” (nfpa) 70 and local/state codes. In canada, electric grouding conforms to the canadian electric code csa c22.1. failure to observe this warning can result in electrical shock that can cause personal injury.

CARBON MONOXIDE POISONING HAZARD

Special warning for installation of furnaces or air handling units in enclosed areas, such as garages, utility rooms or parking areas.

Carbon monoxide producing devices (such as an automobile, space heater, gas water heater, etc.) should not be operated in enclosed areas such as unventilated garages, utility rooms or parking areas because of the danger of carbon monoxide (CO) poisoning resulting from the exhaust emissions.If a furnace or air handler is installed in an enclosed area such as a

garge, utility room or parking area and a carbon monoxide producing device is operated therein, there must be adequate ventilation directly to outside.

This ventilation is necessary to avoid the danger of CO poisoning which can occur if a carbon monoxide producing device continues to operate in the enclosed area. Carbon monoxide emission can be (re)circulated throughout the building if the furnace or air handler is operating in any mode.

CO can cause serious illness including permanent brain damage or death.

3.3 Requirements for Communication Line

Note:

If the unit is installed in the place with strong electromagnetic interference, shielded wire must be applied on the communication wire between indoor unit and wired controller. Twisted pair line with shielding function must be applied on the communication wire between indoor unit and indoor unit (outdoor unit).

3.3.1 Select communication line for indoor unit and wired controller

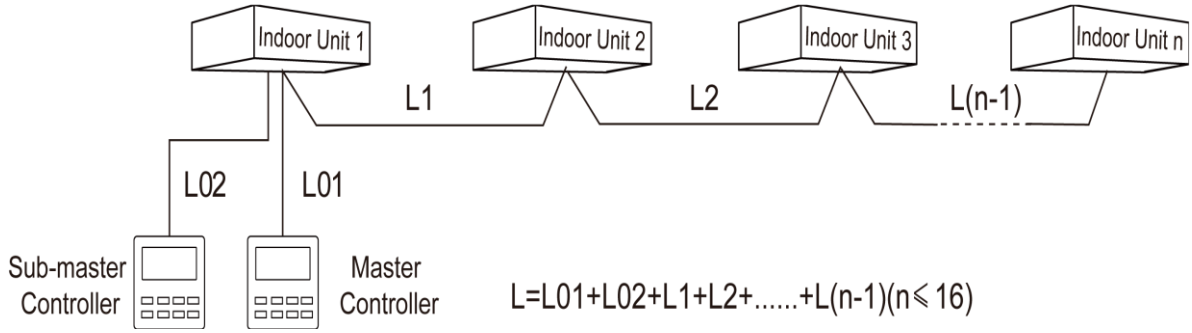

Fig 3.3.1

Wire type	Total length of communication wire between indoor unit and wired controller (m/feet)	Wire diameter (AWG)	Wire standard	Remark
Light/Ordinary polyvinyl chloride sheathed cord. (UL60335-2011)	L≤250(850)	2×18~2×16	UL60335-2011	1. Total length of communication cable can't exceed 250m (850feet). 2. The cord shall be Circular cord (the cores shall be twisted together). 3. If unit is installed in places with intense magnetic field or strong interference, it is necessary to use shielded wire.

3.3.2 Select communication line for indoor unit and outdoor unit

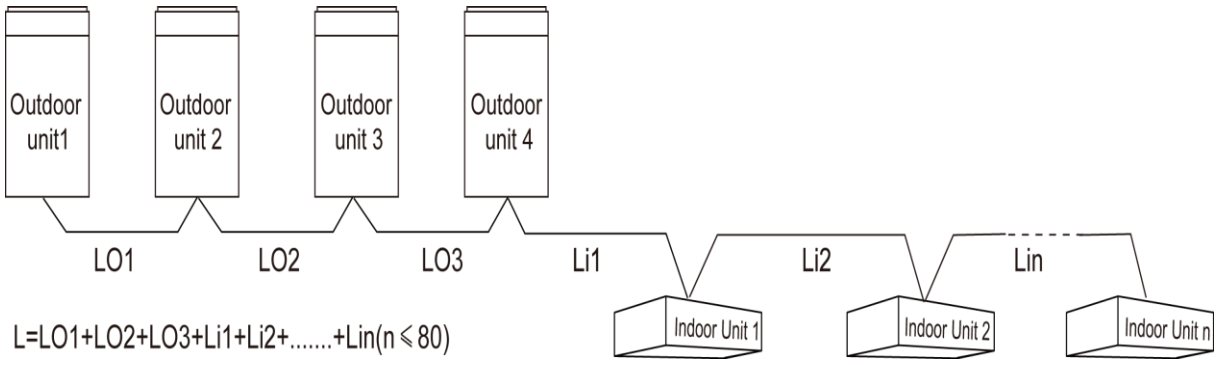

Fig 3.3.2

Wire type	Total length of communication wire between indoor unit and indoor unit(outdoor unit) (m/feet)	Wire diameter (AWG)	Wire standard	Remark
(communication line for indoor unit) Light/Ordinary polyvinyl chloride sheathed cord. (UL60335-2011)	L⩽1000(3280)	≥2×18	UL60335-2011	1. If the wire diameter is enlarged to 18AWG, the total communication cable length can reach 1500m (4920 feet). 2. The cord shall be Circular cord (the cores shall be twisted together). 3. If unit is installed in places with intense magnetic field or strong interference, it is necessary to use shielded wire.
(communication line for outdoor unit) Light/Ordinary polyvinyl chloride sheathed cord. (UL60335-2011)	L⩽1000(3280)	≥2×18	UL60335-2011	

3.4 Wiring Requirements

(1) Power Cord Size and Air Switch Capacity

Model	Power Cord Size	Air Switch apacity (A)	Minimum Sectional Area of Ground Wire(AWG)	Minimum Sectional Area of Power Cord(AWG)
GMV-ND24A/A-T(U)	208/230V-1Ph-60HZ	15	18	18
GMV-ND30A/A-T(U)		15	18	18
GMV-ND36A/A-T(U)		15	18	18
GMV-ND42A/A-T(U)		15	18	18
GMV-ND48A/A-T(U)		15	18	18
GMV-ND54A/A-T(U)		15	18	18

NOTICE
(1) Use copper wire only as unit's power cord. Operating temperature should be within its rated value.
(2) If the power cord is more than 15 m (49-1/4 feet) long, please increase properly the sectional area of power cord to avoid overload, which may cause accident.
(3) Above selection requirements: Power cord size is based on BV single-core wire (2~4pc) at 40° (104°F) Cambient temperature when laying across plastic pipe. Air switch is D type and used at 40°C (104°F). If actual installation condition varies, please lower the capacity appropriately according to the specifications of power cord and air switch provided by manufacturer.
(4) Install cut-off device near the unit. The minimum distance between each stage of cut-off device should be 3 mm (1/8 inch) (The same for both indoor unit and outdoor unit).

4 Installation Instructions

4.1 Dimension Data

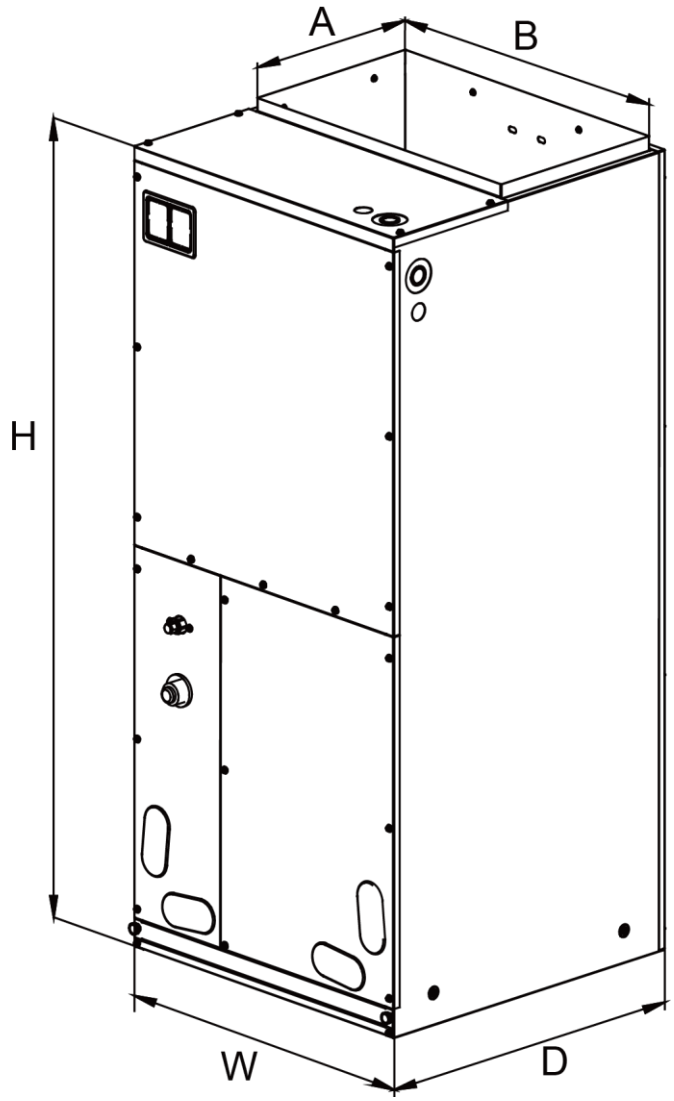

Fig 4.1

Unit: Inch (mm)

MODEL	DIMENSION				
	W	D	H	A	B
GMV-ND24A/A-T(U)	18-1/8"(460)	21-1/4"(540)	43-1/2"(1105)	11-5/8"(295)	16-3/4"(426)
GMV-ND30A/A-T(U)	18-1/8"(460)	21-1/4"(540)	43-1/2"(1105)	11-5/8"(295)	16-3/4"(426)
GMV-ND36A/A-T(U)	21-1/4"(540)	21-1/4"(540)	48-1/4"(1224)	11-5/8"(295)	20"(508)
GMV-ND42A/A-T(U)	21-1/4"(540)	21-1/4"(540)	48-1/4"(1224)	11-5/8"(295)	20"(508)
GMV-ND48A/A-T(U)	24-7/8"(630)	21-1/4"(540)	48-1/4"(1224)	11-5/8"(295)	20"(508)
GMV-ND54A/A-T(U)	24-7/8"(630)	21-1/4"(540)	48-1/4"(1224)	11-5/8"(295)	20"(508)

4.2 Location

4.2.1 Installation Site

◆ A place where cool air can be distributed throughout the room.

◆ A place where condensation water is easily drained out.

◆ A place that can bear the weight of indoor unit.

◆ A place which is easy for maintenance.

◆ A place where easy connection with the outdoor unit is available.

◆ A place where is 1m or more away from other electric appliances such as television, audio device, etc.

◆ Avoid a location where there is heat source, high humidity or inflammable gas.

◆ Do not place the unit near a laundry, a bath, a shower or a swimming pool.

◆ Be sure that the installation conforms to the installation dimension diagram.

◆ The space around the unit is adequate for ventilation

4.2.2 Air Handler

WARNING: This air handler is designed for indoor installation only. Do not install it outdoors.

When installing the air handler, take consideration to minimize the length of refrigerant tubing as much as possible. Do not install the air handler in a location either above or below the condenser that violates the instructions provided with the condenser. Service clearance is to take precedence. Allow a minimum of 24” in front of the unit for service clearance. When installing in an area directly over a finished ceiling (such as an attic), an emergency drain pan is required directly under the unit. See local and state codes for requirements. When installing this unit in an area that may become wet, elevate the unit with a sturdy, non-porous material. In installations that may lead to physical damage (i.e. a garage) it is advised to install a protective barrier to prevent such damage.

This air handler is designed for a complete supply and return ductwork system. Do not operate this product without all ductwork attached.

Based upon the actual conditions, if air handler is installed as Fig 4.2(A), the air handler should be concealed in a specific room or space and make sure the air handler is not accessible to the general public.

Based upon the actual conditions, if air handler is installed as Fig 4.2(B), make sure that there is enough space for care and maintenance and the height between the air handler and ground is above 2500mm. And the air handler is not accessible to the general public.

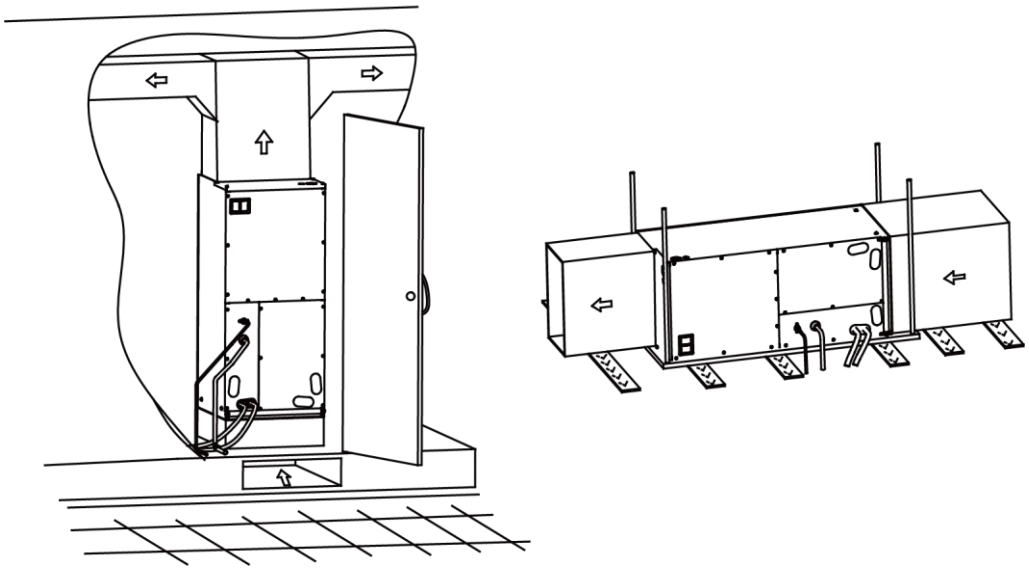

(A) (B)

Fig 4.2

4.3 Piping Work

4.3.1 Specification of Connection Pipe

Model	External Diameter (inch)	
	Gas Pipe(in)	Liquid Pipe(in)
GMV-ND24A/A-T(U)	5/8	3/8
GMV-ND30A/A-T(U)	5/8	3/8
GMV-ND36A/A-T(U)	5/8	3/8
GMV-ND42A/A-T(U)	5/8	3/8
GMV-ND48A/A-T(U)	5/8	3/8
GMV-ND54A/A-T(U)	5/8	3/8

4.3.2 Piping Preparation

All cut ends are to be round, burr free, and cleaned. Failure to follow this practice increases the chances for refrigerant leakage.

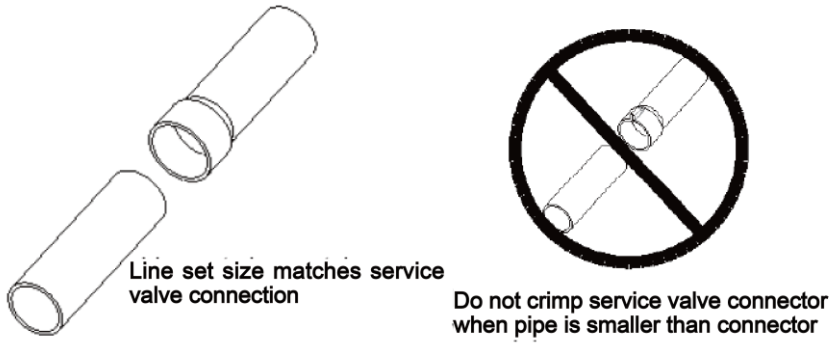

Fig 4.3.

4.4 Condensate Removal

The drain pan has primary and secondary drain connection (Figure 8). Condensate removal is performed by attaching a 3/4” PVC pipe to the evaporator coil pan and terminated in accordance with local or state Plumbing/HVAC codes. The installation must include a “P” style trap that is located closely to the evaporator coil. Do not over-tighten the drain connection(s) in order to prevent possible damage to the evaporator drain pan.

See Fig 4.6 for details of a typical condensate line “P” trap.

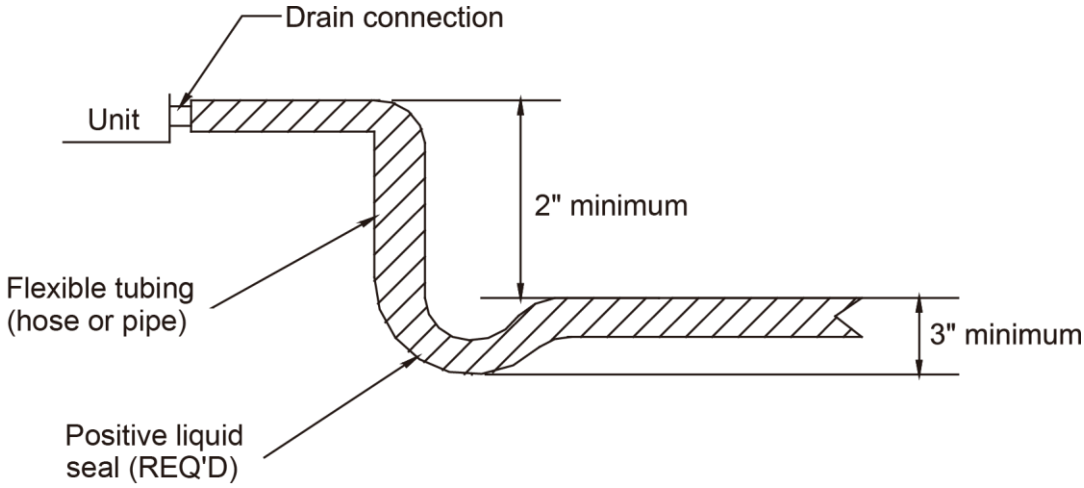

Fig 4.4

4.5 Ductwork

This air handler is designed for a complete supply and return ductwork system.

WARNING: Do not operate the unit without all ductwork completed.

Do not operate this product without all ductwork attached.

Inadequate ductwork that restricts airflow can result in improper performance and compressor or heater failure. Ductwork is to be constructed in a manner that limits restrictions and maintains suitable air velocity. Ductwork is to be sealed to the unit in a manner that will prevent leakage.

Return Ductwork: Do not terminate the return ductwork in an area that can introduce toxic, or objectionable fumes/odors into the ductwork. The return ductwork is to be introduced into the

air handler bottom (upflow configuration).

Return Air Filters: Each installation must include a return air filter. This filtering may be performed at the air handler or externally such as a return air filter grille.

4.6 Installation of Wired Controller

Please refer to User Manual of Wired Controller for the installation details.

Note: When installation is finished, the unit must be tested and debugged before operation. Please refer to Instruction Manual of ODU for auto addressing and debugging details.

5 Wiring Work

WARNING

Before obtaining access to terminals, all supply circuits must be disconnected.

NOTICE
（1） Units must be earthed securely, or it may cause electric shock.
（2） Please carefully read the wiring diagram before carry out the wiring work, incorrect wiring could cause malfunction or even damage the unit.
（3） The unit should be powered by independent circuit and specific socket.
（4） The wiring should be in accordance with related regulations in order to ensure the units reliable running.
（5） Install circuit breaker for branch circuit according to related regulations and electrical standards.
（6） Keep cable away from refrigerant pipings, compressor and fan motor.
（7） The communication wires should be separated from power cord and connection wire between indoor unit and outdoor unit.
（8） Adjust the static pressure via wired controller according to site circumstance.
（9） If the supply cord is damaged, it must be replaced by manufacturer, its service agent or similarly qualified persons in order to avoid a hazard.

5.1 Connection of Wire and Patch Board Terminal

（1）The connection of wire (as shown in fig 5.1.1)

1）Strip about 25mm (1 inch) insulation of the wire end by stripping and cutting tool.

2）Remove the wiring screws on the terminal board.

3）Shape the tail of wire into ring by needle nose plier, and keep the gauge of ring in accordance with screw.

4）Use the screwdriver for tightening the terminal.

（2）The connection of stranded wire (as shown in fig 5.1.2)

1）Strip about 10mm (3/8 inch) insulation of the end of stranded wire by stripping and cutting tool.

2）Loosen the wiring screws on terminal board.

3）Insert the wire into the ring tongue terminal and tighten by crimping tool.

4）Use the screwdriver for tightening the terminal.

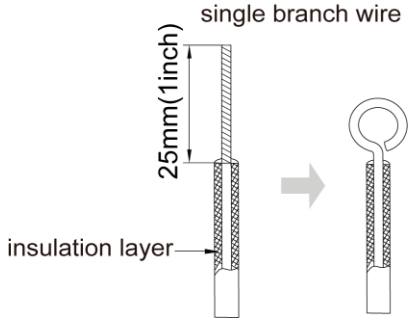

Fig 5.1-1

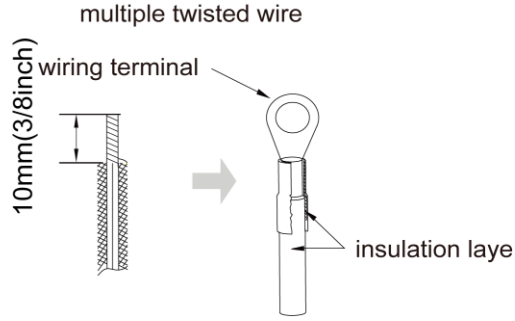

Fig 5.1-2

5.2 Power Cord Connection

NOTICE! **All indoor units must be unified of power supply so that they can be powered ON/OFF at the same time.**

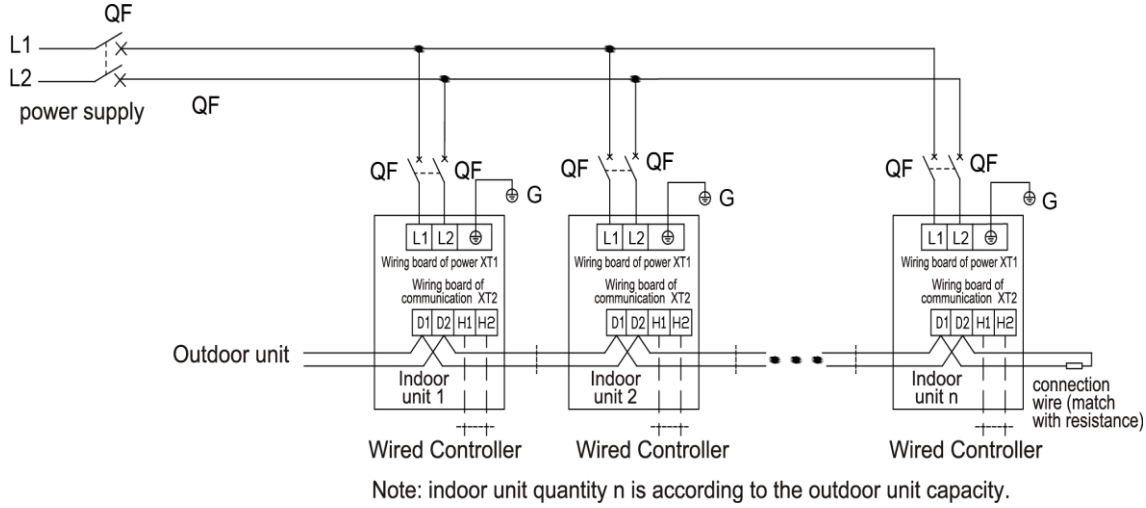

Fig 5.2

● For units with single-phase power supply.

（1）Detach the electric box lid.

（2）Let the power cord pass through the wiring through-holes.

（3）Connect the power cord to terminal "L, N,⏚ ".

（4）Fix the power cord with wiring clamp.

5.3 Connection of Communication Wire between Indoor Unit and Outdoor Unit (or indoor unit)

(1) Detach the electric box lid.

(2) Let the Communication cable pass through the wiring through-holes.

(3) Connect the communication wire to terminal D1 and D2 of indoor 4-bit wiring board, as shown in fig5.3.1.

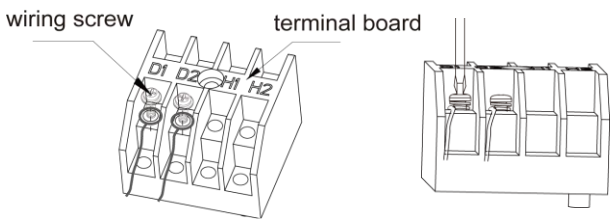

Fig 5.3.1

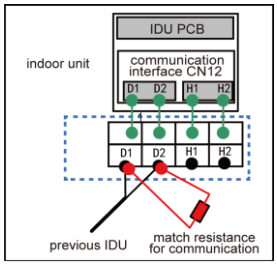

Fig 5.3.2

(4) Fix the communication cable with clamp of electric box.

(5) For more reliable communication, make sure connect the terminal resistor to the most downstream IDU of the communication bus (terminal D1 and D2), as shown in fig 5.3.2, terminal resistor is provided with each ODU.

5.4 Connect Communication Wire of Wired Controller

(1) Open electric box cover of indoor unit.

(2) Let the communication wire go through the rubber ring.

(3) Connect the communication wire to terminal H1 and H2 of indoor 4-bit wiring board.

(4) Fix the communication wire with wire clip on the electric box.

(5) Wiring instructions of remote receiving light board and wired controller:

1) Fig 5.4.1 shows the installation of wired controller.

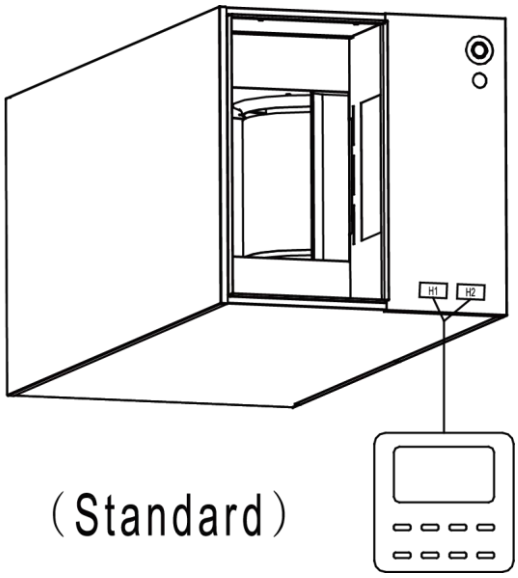

Fig 5.4.1

2) Wired controller and receiving light board can be installed at the same time. When operating through a remote controller, both wired controller and the receiving light board can receive the signals.

5.5 Illuminate for Connection of Wired Controller and Indoor Units Network

(1) Communication wire of indoor unit and outdoor unit (or indoor unit) is connected to D1, D2.

(2) Wired controller is connected to H1, H2.

(3) One indoor unit can connect two wired controllers that must be set as master one and slave one.

(4) One wired controller can control 16 indoor unitS in maximum at the same time. (As shown in fig5.5)

NOTICE
（1） The type of indoor units must be the same if they are controlled by the same wired controller.
（2） When the indoor unit is controlled by two wired controllers, the addresses of the two wired controllers should be different through address setting. Address 1 is for main controller; Address 2 is for slave controller. Detailed setting please refer to the instruction manual of wired controller.

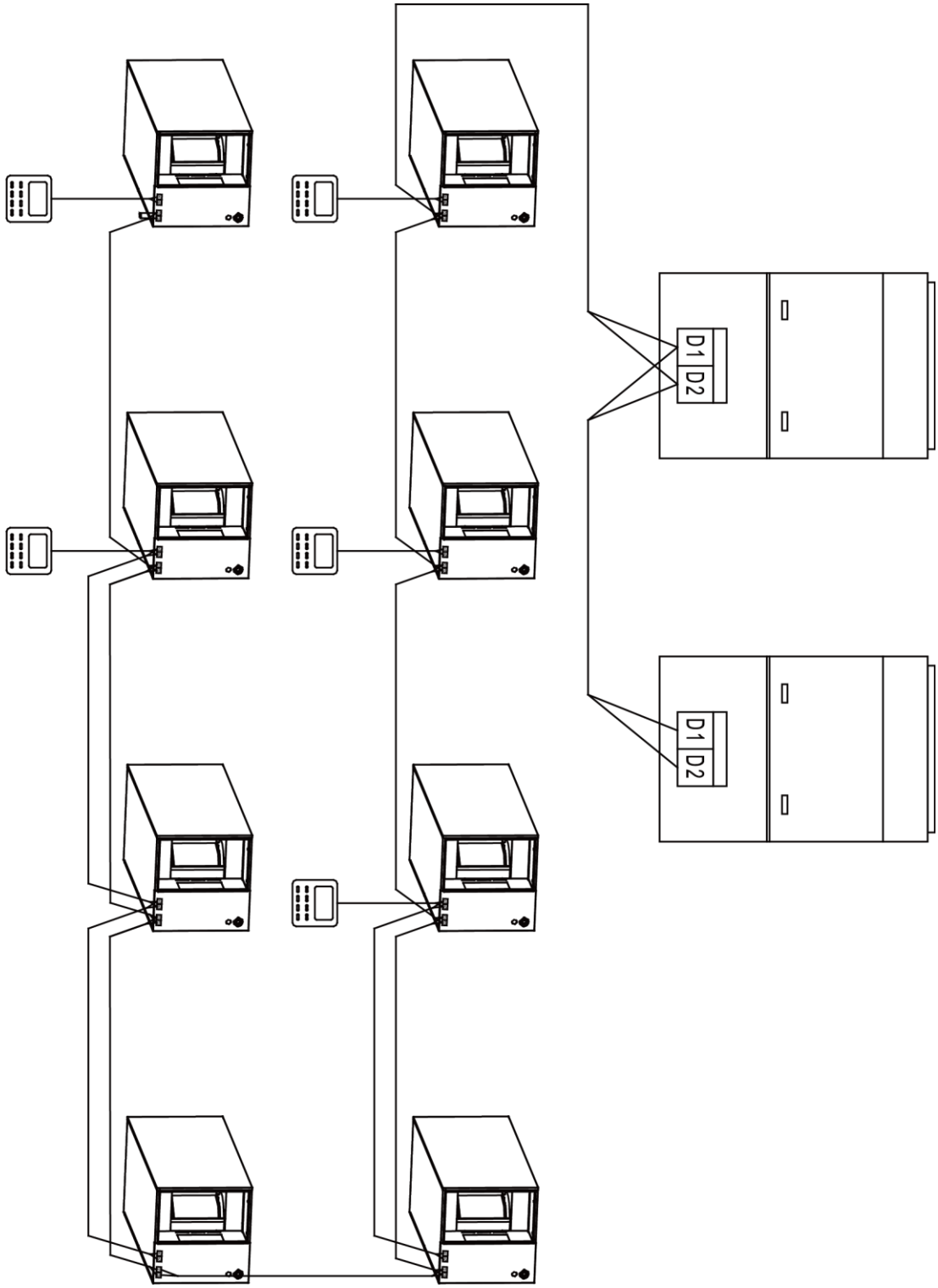

Fig 5.5

6 Routine Maintenance

NOTICE	
（1）	Do turn off the unit and cut off the main power supply when cleaning the air conditioner to avoid electric shock or injury.
（2）	Stand at solid table when cleaning the unit.
（3）	Do not clean the unit with hot water whose temperature is higher than 45°C to prevent fade or deformation.
（4）	Do not dry the filters by fire, or it may catch fire or become deformed.
（5）	Clean the filter with a wet cloth dipped in neutral detergent.
（6）	Please contact after-sales service staff if there is abnormal situation.

6.1 Cleaning of Filter

(1) Remove the filters from inlet of IDU. Use a vacuum cleaner to remove dust. If the filters are dirty, wash them with warm water and mild detergent, and dry the filters in the shade.

(2) If the unit used in the environment with much dust, please clean it regularly. (Usually once every two weeks).

6.2 Maintenance before the Seasonal Use

(1) Check if the air inlet and air outlet of indoor and outdoor unit are blocked.

(2) Check if securely grounded.

(3) Check if all the power cord and communication cable are securely connected.

(4) Check if any error code displayed after energized.

6.3 Maintenance after the Seasonal Use

(1) Set the unit in fan mode for half a day in a sunny day to dry the inner part of unit;

(2) When the unit won’t be used for a long time, please cut off power supply for energy saving; the characters on the wired controller screen will disappear after cutting off the power supply.

7 Table of Error Codes for Indoor Unit

Error Code	Content	Error Code	Content	Error Code	Content
L0	Indoor Unit Error	L9	Quantity Of Group Control Indoor Units Setting Error	d8	Water Temperature Sensor Error
L1	Indoor Fan Protection	LA	Indoor Units Incompatibility Error	d9	Jumper Cap Error
L2	E-heater Protection	LH	Low Air Quanlity Warning	dA	Indoor Unit Hardware Address Error
L3	Water Full Protection	LC	Outdoor-Indoor Incompatibility Error	dH	Wired Controller PC-Board Error
L4	Wired Controller Power Supply Error	d1	Indoor Unit PC-Board Error	dC	Capacity DIP Switch Setting Error.
L5	Anti-Frosting Protection	d3	Ambient Temperature Sensor Error	dL	Outlet Air Temperature Sensor Error
L7	No Master Indoor Unit Error	d4	Inlet Pipe Temperature Sensor Error	dE	Indoor Unit CO_2 Sensor Error
L8	Power Insufficiency Protection	d6	Outlet Pipe Temperature Sensor Error	db	Special Code: Field Debugging Code

8 Troubleshooting

The air conditioner is not expected to be serviced by users. Incorrect repair may cause electric shock or fire, so please contact an authorized service center for professional service. The following checks prior to contact may save your time and money.

Phenomenon	Troubleshooting
The unit can't start	① Power supply is not connected. ② Circuit breaker tripping caused by leakage of electricity. ③ Input voltage is too low. ④ Defect of main PC-board.
The unit stops after running for a while.	① The inlet or outlet of ODU or IDU are blocked by obstacle.
Poor cooling effect	① The filter is dirty. ② Too heavy heat load of room(e.g. too many people) ③ Door or windows is open. ④ Inlet and outlet of IDU are blocked. ⑤ Setting temperature is too high. ⑥ Refrigerant is insufficient (e.g. refrigerant leakage)
Poor heating effect	① The filter is dirty. ② Door or window is open. ③ Setting temperature is too low. ④ Refrigerant is insufficient (e.g. refrigerant leakage)
Indoor fan doesn't start up during heating	① At starting, the IDU fan could not operate till the heat exchange become hot, for preventing delivering the cool air. ② At defrosting, the IDU fan stopped due to system switch to cooling mode. For preventing delivering the cool air, and resume operating after defrosting.

Note:

If air conditioner still fails to work normally after checking and handling as described above, please stop using it immediately and contact local service center for assistance.

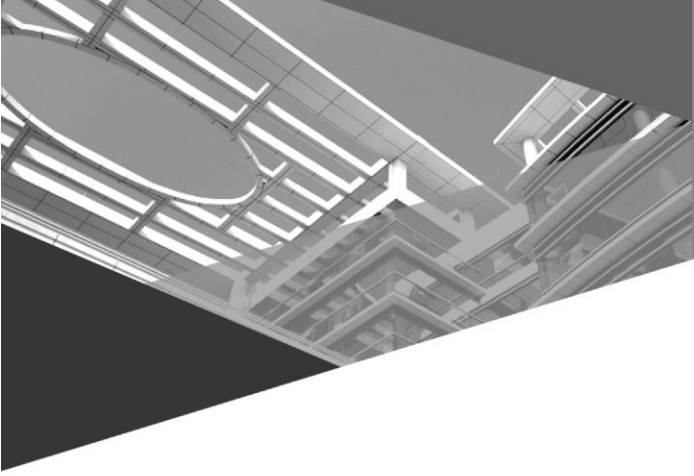

GREE ELECTRIC APPLIANCES, INC. OF ZHUHAI

Add: West Jinji Rd, Qianshan, Zhuhai,Guangdong, China, 519070
Tel: (+86-756) 8522218
Fax: (+86-756) 8669426
E-mail: gree@gree.com.cn www.gree.com

600005000185